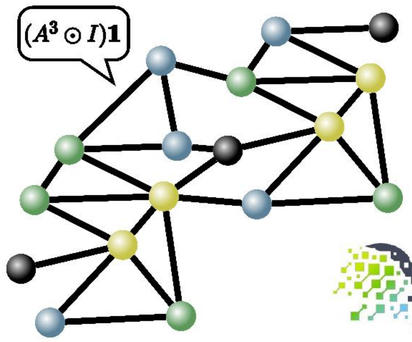

G^{2}N^2 : Weisfeiler and Lehman go grammatical

Jason Piquenot, Aldo Moscatelli, Maxime Bérar, Pierre Héroux, Jean-Yves Ramel, Romain Raveaux, Sébastien Adam

LITIS Lab, University of Rouen Normandy, France, LIFAT Lab, University of Tours, France

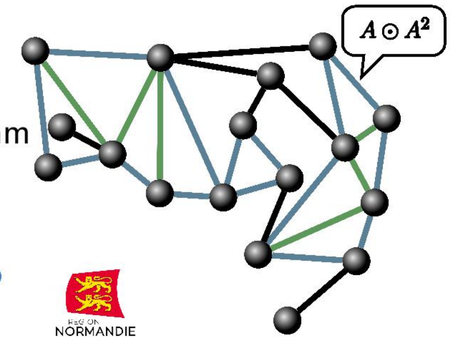

Contributions

- A generic framework to design a GNN from any fragment of an algebraic language.
- The instantiation of the framework on $\mathrm{ML}(\mathcal{L}_3)$ resulting in G^{2}N^2, a provably 3-WL GNN.
- Experiments demonstrating that G^{2}N^2 outperforms existing 3-WL GNNs on various downstream tasks.

MATLANG and WL

- **Definition 1:** MATLANG is a matrix language with operation set $\{+, \cdot, \odot, \ ^{\mathbf{T}}, \mathrm{Tr}, \mathrm{diag}, 1, \times, f\}$. Restricting operations to a subset $\mathcal{L}$ defines a fragment of MATLANG $\mathrm{ML}(\mathcal{L})$. $s(X) \in \mathbb{R}$ is a sentence in $\mathrm{ML}(\mathcal{L})$ if it consists of consistent consecutive operations in $\mathcal{L}$, operating on a matrix X, resulting in a scalar value. In terms of separative power, $\mathrm{ML}(\mathcal{L}_3) \sim$ 3-WL with $\mathcal{L}_3 = \{\cdot, \ ^{\mathbf{T}}, 1, \mathrm{diag}, \odot\}$.
- **Ex:** $s(X) = 1^{\mathbf{T}}(X^2 \odot \mathrm{diag}(1))1 = \mathrm{Tr}(X^2) \in \mathrm{ML}(\mathcal{L}_3)$.

Context-Free Grammar

- **Definition 2:** A Context-Free Grammar (CFG) $G = (V, \Sigma, R, S)$ with V a finite set of variables, Σ a finite set of terminal symbols, R a finite set of rules $V \to (V \cup \Sigma)^*$, S a start variable.

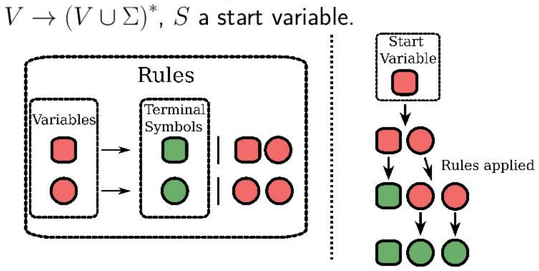

Grammar of literature GNNs

- **Variables:** S scalar, V_c/V_r column/row vector, M matrix.
- **GCN:**

$$V_c \to CV_c \mid 1$$

- **2-IGN:**

$$M_1 \to M_2 \odot \mid M_2 \odot J \mid (M_2)^{\mathbf{T}} \odot J$$
$$M_2 \to JM_1 \mid M_1J \mid JM_1J \mid A$$

- **PPGN:**

$$M \to MM \mid \mathrm{diag}(1) \mid A$$

Framework

From $\mathrm{ML}(\mathcal{L}_3)$ to the 3-WL G^{2}N^2

Step 1: 3-WL exhaustive CFG

- **Theorem 1:** For $G_{\mathcal{L}_3}$ defined as follow we have $L(G_{\mathcal{L}_3}) = \mathrm{ML}(\mathcal{L}_3)$.

$$S \to (V_r)(V_c) \mid \mathrm{diag}(S) \mid SS \mid (S \odot S)$$
$$V_c \to (V_c \odot V_c) \mid MV_c \mid (V_r)^{\mathbf{T}} \mid V_cS \mid 1$$
$$V_r \to (V_r \odot V_r) \mid V_rM \mid (V_c)^{\mathbf{T}} \mid SV_r$$
$$M \to (M \odot M) \mid MM \mid (M)^{\mathbf{T}} \mid \mathrm{diag}(V_c) \mid (V_c)(V_r) \mid A$$

Step 2: 3-WL reduced CFG

- **Theorem 2:** The following CFG denoted r-$G_{\mathcal{L}_3}$ is as expressive as 3-WL.

$$V_c \to MV_c \mid 1$$
$$M \to (M \odot M) \mid MM \mid \mathrm{diag}(V_c) \mid A$$

V_c variable maintains expressiveness at a set depth.

Step 3: Parallelised rules generation in r-$G_{\mathcal{L}_3}$

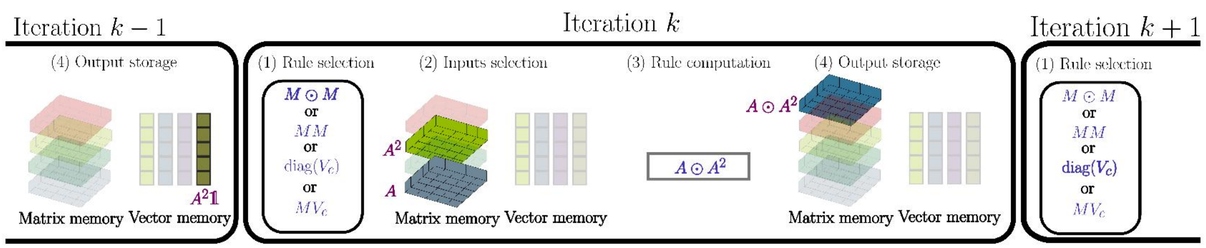

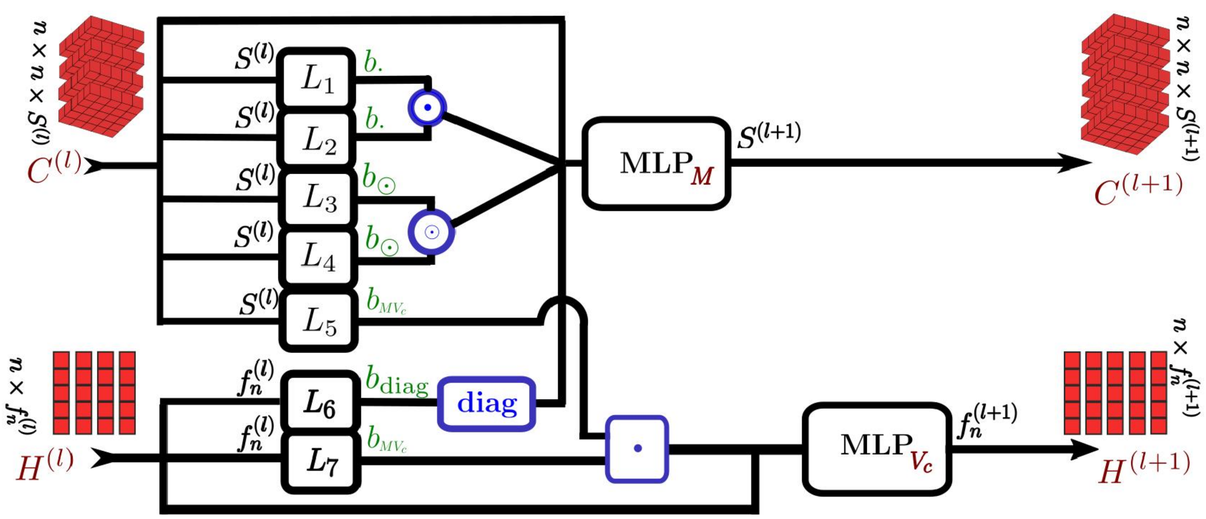

Overview of G^{2}N^2

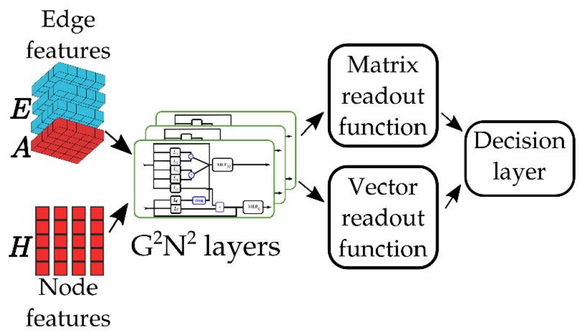

Regression task: QM9 dataset (MAE ↓)

Target	PPGN	G^{2}N^2
μ	0.0934	**0.0703**
α	0.318	**0.127**
ϵ_{homo}	0.00174	**0.00172**
ϵ_{lumo}	0.0021	**0.00153**
$\Delta\epsilon$	0.0029	**0.00253**
R^2	3.78	**0.342**
ZPVE	0.000399	**0.0000951**
U_0	0.022	**0.0169**
U	0.0504	**0.0162**
H	0.0294	**0.0176**
G	0.024	**0.0214**
C_v	0.144	**0.0429**
T / ep	129 s	98 s

PPGN	G^{2}N^2
0.231	**0.102**
0.382	**0.196**
0.00276	**0.0021**
0.00287	**0.00211**
0.0029	**0.00287**
16.07	**1.19**
0.00064	**0.0000151**
0.234	**0.0502**
0.234	**0.0503**
0.229	**0.0503**
0.238	**0.0504**
0.184	**0.0707**
131 s	57 s

Classification task: TUD dataset (ACC ↑)

Dataset	G^{2}N^2	rank	Best GNN competitor
MUTAG	92.5±5.5	1(1)	92.2±7.5
PTC	72.3±6.3	1(1)	68.2±7.2
Proteins	80.1±3.7	1(1)	77.4±4.9
NCI1	82.8±0.9	5(3)	83.5±2.0
IMDB-B	76.8±2.8	3(3)	77.8±3.3
IMDB-M	54.0±2.9	2(2)	54.3±3.3

Acknowledgments

The authors acknowledge the support of the French Agence Nationale de la Recherche (ANR) under grant ANR-21-CE23-0025 (CoDeGNN project). The authors acknowledge the support of the ANR and the Région Normandie under grant ANR-20-THIA-0021 (HAISCoDe project).

GITHUB link